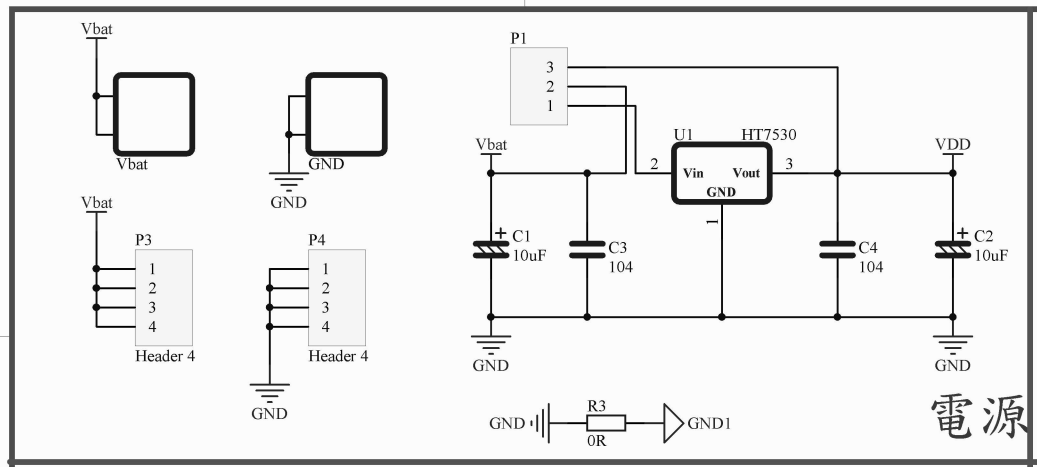
Vbat
GND
P1
U1
HT7530
Vin
Vout
GND
VDD
C1
10uF
C3
104
C4
104
C2
10uF
P3
P4
Header 4
R3
0R
GND1
電源

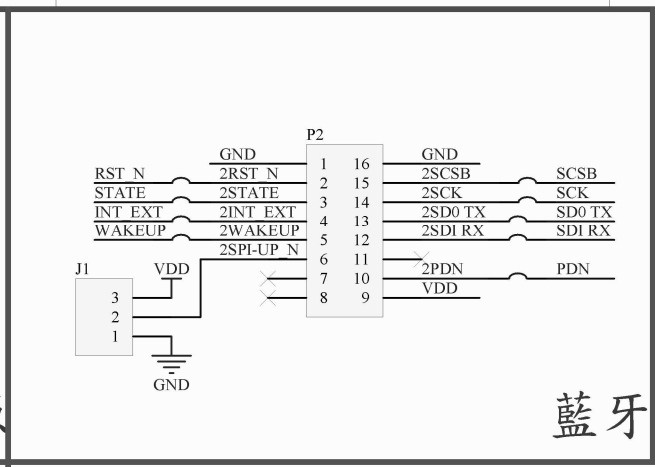
P2
J1
VDD
GND
RST_N
STATE
INT_EXT
WAKEUP
2RST_N
2STATE
2INT_EXT
2WAKEUP
2SPI-UP_N
2SCSB
2SCK
2SD0 TX
2SDI RX
2PDN
SCSB
SCK
SD0 TX
SDI RX
PDN
藍牙

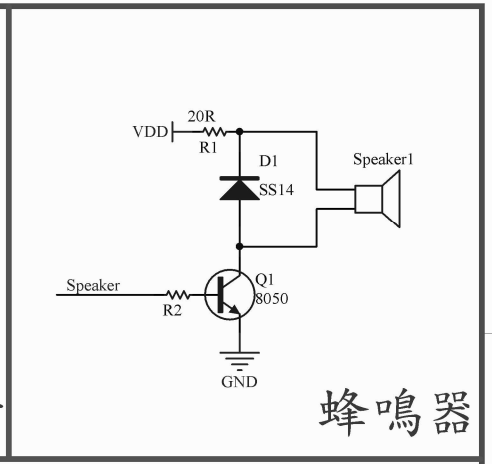
VDD
20R
R1
D1
SS14
Speaker1
Speaker
R2
Q1
8050
GND
蜂鳴器

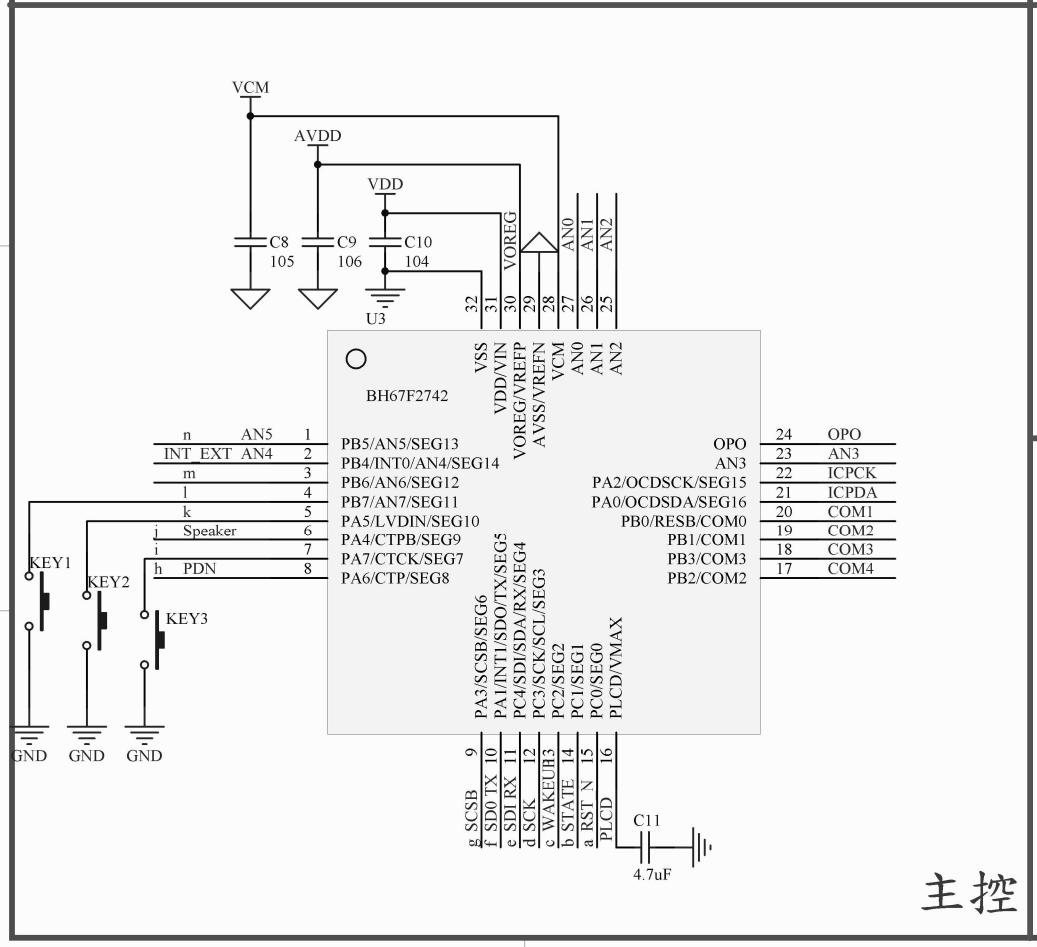
VCM
AVDD
VDD
C8
105
C9
106
C10
104
U3
BH67F2742
VSS
VDD/VIN
VOREG/VREFP
AVSS/VREFN
VCM
AN0
AN1
AN2
PB5/AN5/SEG13
PB4/INT0/AN4/SEG14
PB6/AN6/SEG12
PB7/AN7/SEG11
PA5/LVDIN/SEG10
PA4/CTPB/SEG9
PA7/CTCK/SEG7
PA6/CTP/SEG8
OPO
AN3
PA2/OCDSCK/SEG15
PA0/OCDSDA/SEG16
PB0/RESB/COM0
PB1/COM1
PB3/COM3
PB2/COM2
ICPCK
ICPDA
COM1
COM2
COM3
COM4
PA3/SCSB/SEG6
PA1/INT1/SDO/TX/SEG5
PC4/SDI/SDA/RX/SEG4
PC3/SCK/SCL/SEG3
PC2/SEG2
PC1/SEG1
PC0/SEG0
PLCD/VMAX
KEY1
KEY2
KEY3
Speaker
PDN
C11
4.7uF
主控

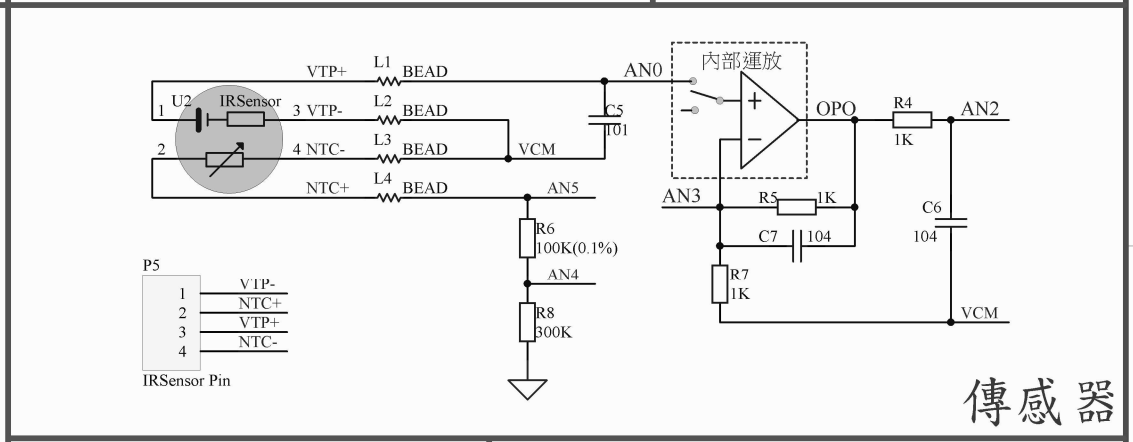
U2
IRSensor
VTP+
VTP-
NTC-
NTC+
L1
L2
L3
L4
BEAD
AN0
C5
101
VCM
AN5
R6
100K(0.1%)
AN4
R8
300K
內部運放
OPO
R4
1K
AN2
AN3
R5
1K
C7
104
R7
1K
C6
104
P5
IRSensor Pin
傳感器

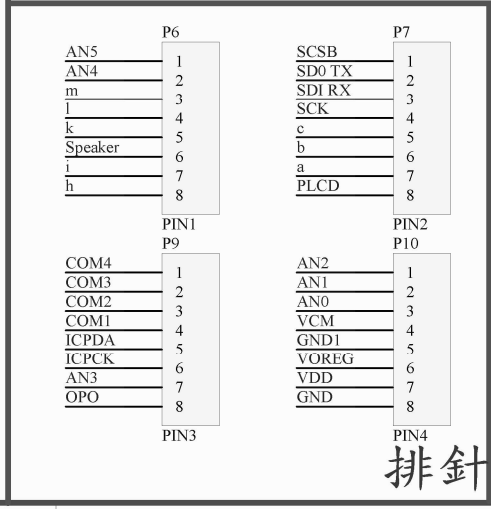
P6
AN5
AN4
m
l
k
Speaker
i
h
PIN1
P7
SCSB
SD0 TX
SDI RX
SCK
c
b
a
PLCD
PIN2
P9
COM4
COM3
COM2
COM1
ICPDA
ICPCK
AN3
OPO
PIN3
P10
AN2
AN1
AN0
VCM
GND1
VOREG
VDD
GND
PIN4
排針

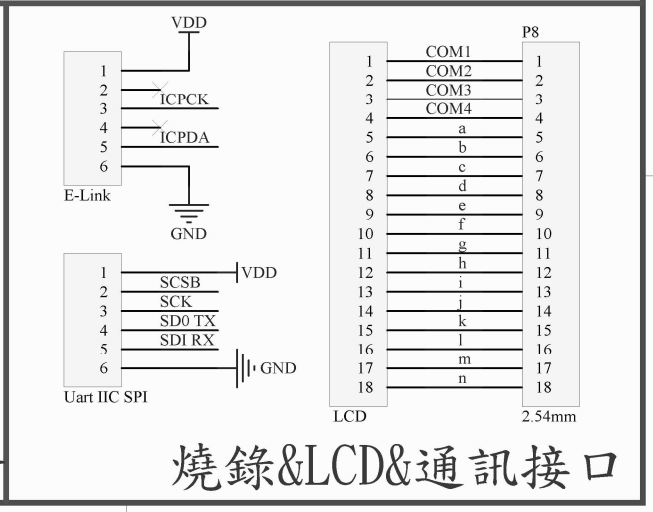
VDD
ICPCK
ICPDA
E-Link
GND
SCSB
SCK
SD0 TX
SDI RX
Uart IIC SPI
P8
COM1
COM2
COM3
COM4
LCD
2.54mm
燒錄&LCD&通訊接口