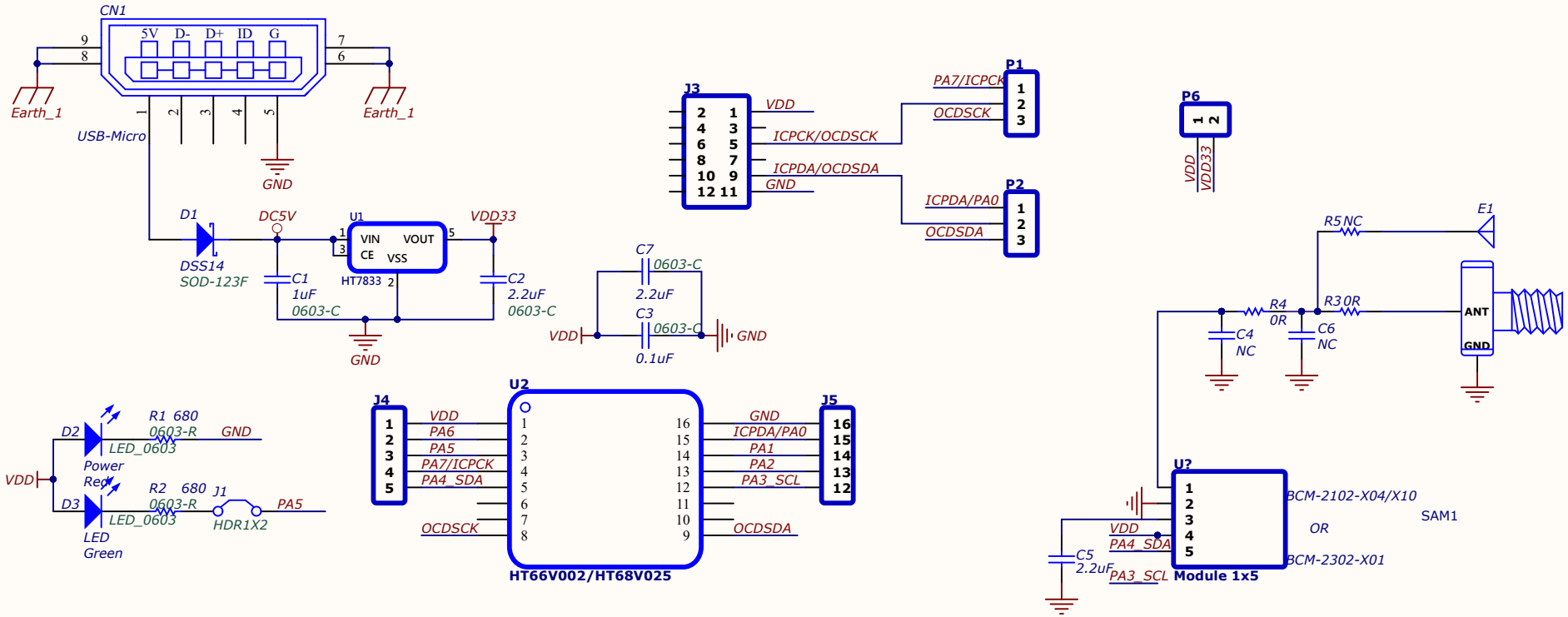

Title		
Size A4	Number	Revision
Date: 2022/6/10	Sheet of	
File: D:\PCB\BC68F2332\DEV-UG\DEV-UG.SchDoc	Drawn By:	